User manual

HG E2000



Table of contents

1. Introduction 5
2. Important information about correct use of batteries 6
3. Definitions 11
3.1 Abbreviations 11
3.2 Terms, concepts, and designations 11
3.3 Icons/pictograms in this user manual 11
4. Signs/marks found on the machine 11
4.1 CE label/machine-type plate 11
4.2 Safety signs 12
4.3 Other signs 13
5. Machine description 13
5.1 General machine design 14
5.1.1 Dimensional sketch 14
5.1.2 Main parts 16
5.1.3 Main components 16
5.2 EU Declaration of Conformity 18
5.3 Description of functionalities 20
5.4 Technical specifications 21
5.6 Warranty 23
5.7 Machine use 24
5.7.1 User requirements and restrictions 24
5.7.2 Intended use 24
5.7.3 Unintended use 24
5.8 Supplied equipment 25
6. 5. Residual hazard 26
7. Transport, use, and operation of the machine 29
7.1 Machine transport/towing 29
7.1.1 Transport 29
7.1.2 Towing 31
7.2 Operating space 31
7.3 Emergency stop – Use and location on the machine 33
7.3.1 Scope of emergency stop 34
7.4 Information during operation 34
7.4.1 Visual information/warnings 34

7.4.2 Acoustic warnings 35
7.5 Normal use 35
7.5.1 Electrical supply (supply separator) 35
7.5.2 Filling up the container 35
7.5.3 How to operate the machines functions 36
7.5.4 Unloading the container 40
7.5.5 Charging 51
7.5.6 Preparing for use 54
7.5.7 Tire pressure and maintenance 54
7.5.8 Driving 54
7.6 Cleaning 58
7.6.1 Safety steps while cleaning 58
7.7 Safety while operating 59
7.7.1 Built-in functionality limitations 59
7.7.2 Other safety notes 59
7.7.3 Start-up after a regular stop 61
7.7.4 Starting up after an emergency stop 61
7.7.5 Start-up after service/repair 62
7.7.6 Freeing a person in the event of an overrun or jam 62
7.8 Troubleshooting/FAQ 62
8. Service, repair, and maintenance 64
8.1 General 64
8.1.1 Maintenance 64
8.1.2 Spare parts 65
8.1.3 Safety during repair/maintenance 65
8.1.4 Disposal of replaced parts 66
8.2 Lubricating moving parts and filling with hydraulic oil 66
8.2.1 Lubrication of moving parts 66
8.2.2 Filling up hydraulic oil 67
8.2.3 Security regarding lubrication and filling 68
9. Storage & disposal 69
9.1 Storage 69
9.2 Disposal 71
10. Appendix 72
10.1 Diagrams 72

10.1.1 Electric diagram 72
10.1.2 Hydraulic diagram 73
10.2 Blueprints 73
10.2.1 Overview prints 73
10.2.2 Parts prints 73
10.3 Additional manuals 73
10.4 Third-party documentation 73
10.5 Checklist for HG Machines HG E2000 and HG E2000 High Tip 74

1. Introduction

The 100% electric 2-ton dumper runs for an entire workday – it is easy and quick to charge.

The E2000 can carry up to 2 tons, while the lithium battery allows 12 working hours – more than a full working day. This makes it simple to use without worrying about emptying the battery. As a matter of fact, it charges from 20-80% in just 2.5 hours.

It is made for urban construction sites for landscapers, contractors, demolition companies, and rental companies.

HG E2000 is designed in Denmark and built at our factory.

- 12 hours of effective driving time – more than enough for a full working day
- Fast charging – 20 to 80% battery in 2 hours, 0-100% in 3.
- Charges with a simple car charger, 16A power, or 220v EU plug
- Lithium battery technology – LiFePO4
- Drive with one pedal for maximum comfort
- Significantly reduces noise levels
- Emission-free work environment

Fabrikant:

HG Poland Sp. Z. O. O.

+48 91 885 23 04

Prosta 34

72-100 Łozienica

Poland

CVR-nr.: PL7010040430

HG Machines ApS

+45 75 89 12 44

hello@hg-machines.com

www.hg-machines.com

Vejlevej 15, 8722 Hedensted

Denmark

Bulk movement made easy.

2. Important information about correct use of batteries

Important information

- It is important to ALWAYS have power on the batteries (more than 0% State of Charge hereafter referred to as “SoC”)
- It is important to charge batteries to 100% as often as possible to rebalance batteries.
- The batteries should always be charged after use if battery power – especially if below 20% (SoC).
- HG do not recommend driving the machine below 10% power (SoC).
- Always turn off main switch when leaving the machine overnight or more than 1 hour to avoid the use of unnecessary use of power.
- Storage for more than 2 weeks – see instructions below.

Battery with 0% power (SoC”) will void all warranties given.



Display with % SoC

Recommended charge temperature range	0°C to +45°C
Discharging operating temperature range	-10°C to +55°C
Short term (<1 month) storage temperature range	-10°C to +35°C
Long term (>1 month) storage temperature range	15 ± 5°C (Constant Temperature)
Relative humidity	10-90%

General information to remember with batteries.

- Regularly check the battery's state of charge. The battery will consume a small amount of power, even when it is not in use or being stored. Recommended to charge to 100% as often as possible.
- Do not use the battery if it has been dropped, excessively handled or damaged in any way!
- Always maintain the battery voltage so that the BMS does not enter a protective or erroneous mode.
- Do not short-circuit the battery.
- Do not dismantle, repair, modify, crush, puncture, open or shred the battery.
- Do not expose the battery to heat or fire. Avoid exposure to direct sunlight.
- Use a battery charger approved by HG.
- Observe the plus (+) and minus (-) marks on the battery and equipment and ensure correct polarity.
- Do not mix batteries of different manufacture, capacity, size, or type within a machine.
- Keep the battery clean and dry.
- The batteries do not contain serviceable parts. Disconnect the battery from loads or charger before inspection.
- Never use any liquids, solvents, or other abrasives to clean the battery. If necessary, clean the battery with a soft and dry cloth.

Storage more than 2 weeks

In conditions where the machine is to be stored without operation over more than 2 weeks, HG recommends that the machine's battery pack be placed in "storage mode" and with a minimum of 40% SoC on the battery pack. If the machine does not have a minimum of 40% SoC on the battery pack at the time of recommendation, it must be charged to a minimum of 40% SoC.

The machine's current power level can be read on the battery indicator mounted in the instrument panel (See Figure 86).



Figure 1: Info display

When the machine's battery pack has reached a current level of at least 40% SoC, do the following:

1. Remove the backplate for the battery compartment by lifting the elongated hole by loosening three hand screws on each side of the machine in the charger compartment and the tool compartment, respectively (see Figure 87 or Figure 88).

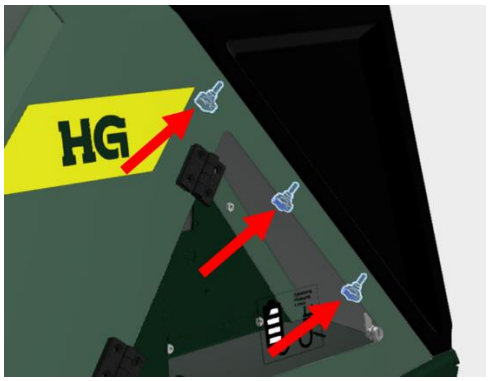

Figure 2: Screw positioning



Figure 3: Backplate

2. Pull apart the blue plug on the battery packs consisting of two counterparts (see Figure 89).

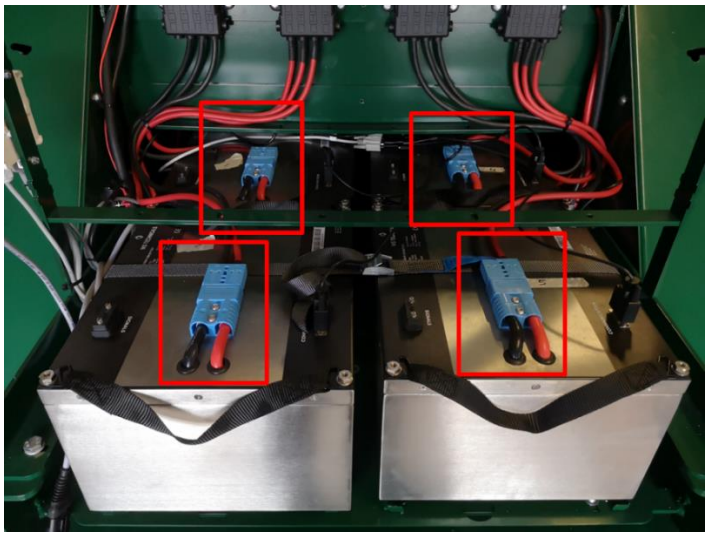

Figure 4: Blue plug on batteries

3. Disconnect the gray or black COM connector from all battery packs (See Figure 90)

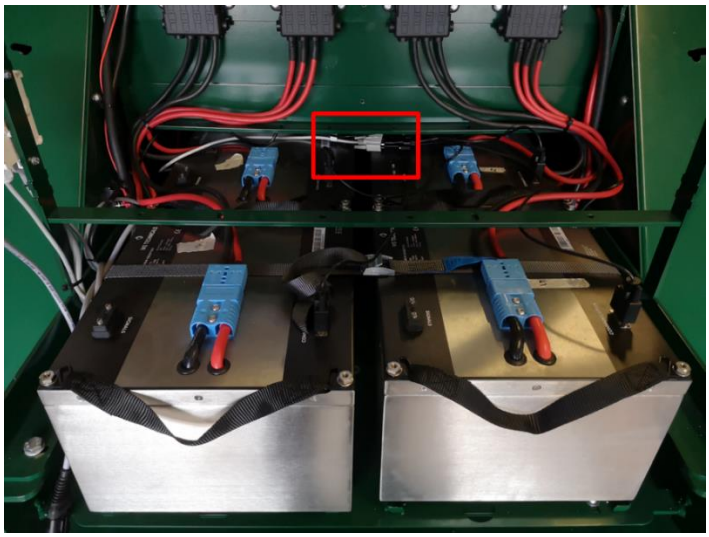

Figure 5: COM-plug

4. Double check that all batteries are disconnected – E2000 have 6 or 8 batteries and some of them are placed below the upper batteries. Take the upper batteries out to disconnect the batteries below.
5. Fit the backplate on the battery compartment again.

Once the tasks above are completed, the machine will automatically go into "storage mode" as it will not detect any discharge. In "storage mode," the battery pack will only consume 1-2% of operation-ready level mode. However, the battery must be inspected every 2-3 months and recharged to a minimum of 40%. When the battery pack needs to be recharged, or the machine needs to be used, connect the blue and COM connectors again.

The optimal storage temperature for the battery is 15 degrees Celsius.

The guidelines below must be followed when the battery is not in active usage.

1. The battery should be charged to a voltage equivalent to 40% SoC.
2. Kep at 15 degrees Celsius +/- 5 degrees.
3. Every 3 months the battery should be recharged to a voltage equivalent to 40% SoC.

Failure to do so will void the warranty.

Deep discharge

If lithium batteries voltage drops below a certain value, it will be irreversibly damaged. This state is typically called deep discharge. To protect the batteries from deep discharge, the battery is monitored by a Battery management system (BMS), which among other features have an under voltage-protection (UV).

The under-voltage protection means that the BMS will monitor the cell voltages and shut off discharge if the voltages drop below the UV threshold for the specific pack.

Please note that the under-voltage protection is not to be viewed as a feature but instead as a safety measure and it is always the user's responsibility to ensure that the power never drops to 0%.

If the pack is left in the under-voltage state, it will at some point deplete itself to a point where it cannot be recharged again. Such a battery must be discarded and never stored.

Reaching the under-voltage threshold will void all warranties given.

Disposal

Dispose of the battery in accordance with all applicable laws and regulations.

Batteries may be returned to HG at the expense of the user.

In case you drop the battery

If a battery is dropped, it should not be used. Place it at a location that prevents propagation in case of fire and put it under human surveillance for 30 min. In this time check for signs of internal damage like heat buildup or smoke, before putting the battery aside.

The warranty is void after a battery has been dropped. If the user wishes, the battery can be shipped to HG for an inspection to verify the functionality of the battery and to reapply the warranty in case no damage is found inside.

In case of smoke

If the battery starts to give off smoke, immediately call local fire authorities, explain the situation, and follow the local guidelines given.

Upon arrival of the local fire authorities, if possible, let the fire authorities disconnect the load or charger and if possible, without touching the battery directly or inhaling the fumes, move the battery outside to a place where a possible fire cannot propagate.

Installation

- Wear protective gear such as gloves and protective glasses while installing batteries.
- Do not directly touch the battery terminals as these present a hazard in terms of electric shock.
- Never install or use a damaged battery.
- Do not reverse connect the power cables (polarity).

3. Definitions

3.1 Abbreviations

Table 1: Abbreviations

Abbreviation	Terms	Explanation
OADC	On-Air Data Communication	Device to get live updates from the machine (optional equipment).
EM break	Electromagnetic brake reduction	Built-in brake functionality

3.2 Terms, concepts, and designations

Table 2: Expressions

Terms	Explanation
Intended use	The function(s) the machine is designed and manufactured to perform.
Unintended use	Description of the improper and illegal use of the machine that can reasonably be expected to occur.
Residual hazard	A hazard that cannot be eliminated through its own safe construction or functional safety.

3.3 Icons/pictograms in this user manual

Table 3: Icons

Icon	Meaning	Explanation
	General information	Information that should be read before using the machine.
	Safety regulation	Safety regulation that informs the operator to orient himself when operating the machine.

4. Signs/marks found on the machine

4.1 CE label/machine-type plate

The CE marking plate is on the machine's left side behind the swivel joint (see Figure 6). The nameplate must not be removed or replaced if it is missing or is so damaged that it has become unreadable (see Figure 7).



Figure 6: CE marking plate

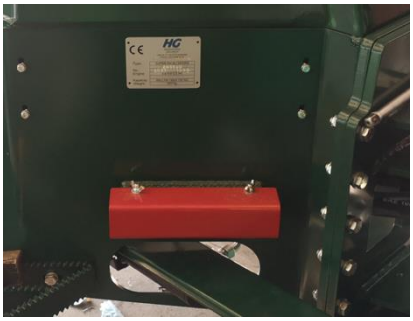

Figure 7: Placement of CE marking plate

4.2 Safety signs

Safety-related labels and symbols attached to the machine and their mean.

Pictogram	Definition
	Warning: Electrical voltage
	Warning: Hand-crushing
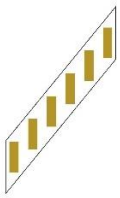	Warning mark for swivel arms

4.3 Other signs

The labels and signs attached to the machine and what they mean.

Pictogram	Definition
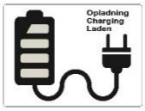	It shows where the charger is located on the machine.
	Shows where tools can be stored on the machine.
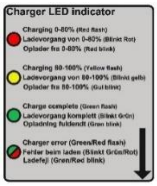	Overview with meaning and explanation of battery diode color.
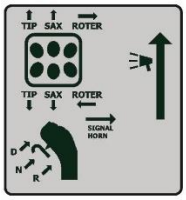	Overview of joystick functionalities.
	Dashboard

5. Machine description

The HG E2000 High Tip is an emission-free dumper used to transport and load/unload various materials (see Figure 8). It is a machine for professionals on, for example, construction sites, but it is also approved for driving on public roads.

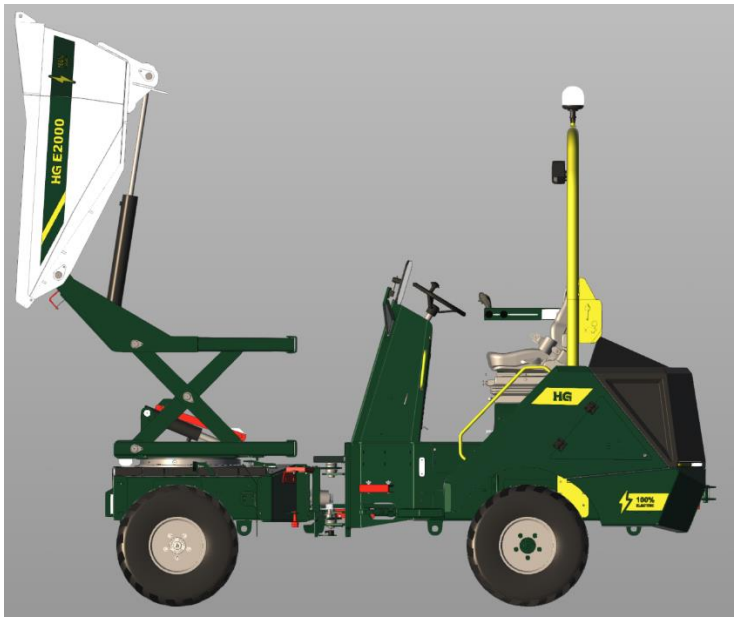

Figure 8: HG E2000 High Tip

The central part of the HG E2000 is a hydraulically driven container that can be rotated and tipped. For this, the machine has hydraulically operated swivel arms that allow the container to be raised and lowered. The machine is equipped with a swivel joint that connects the front and rear, making the machine maneuverable. Each wheel is driven by an electric motor with built-in brake functionality (EM brake). This construction gives the machine four-wheel drive.

5.1 General machine design

5.1.1 Dimensional sketch

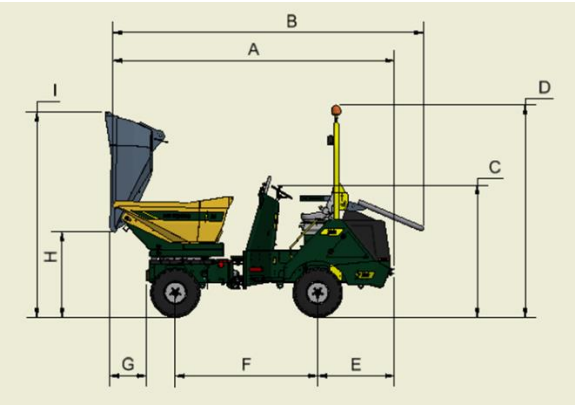

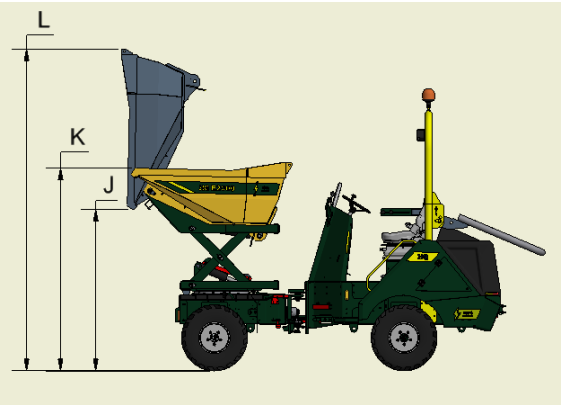

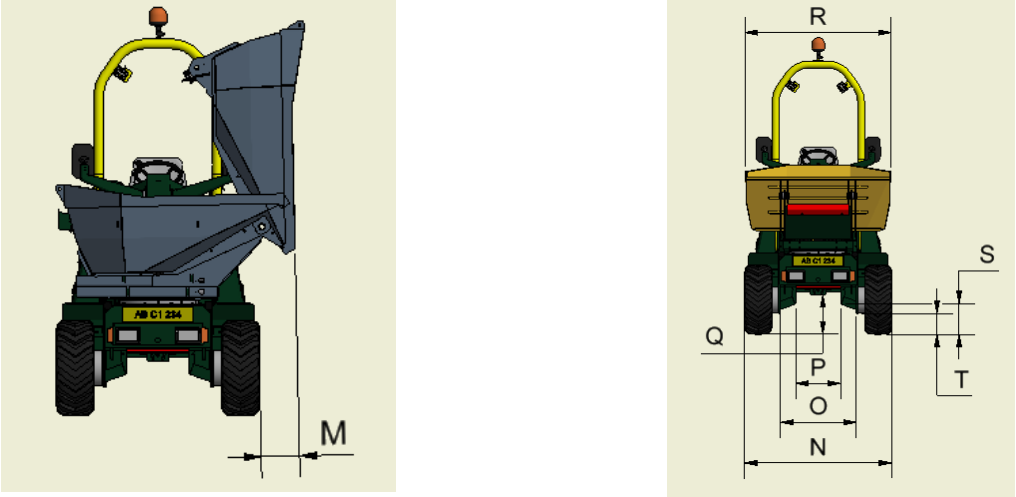

Figure 9: Machine measurement

Symbol	(mm)	Symbol	(mm)
A	3975	K	2145
B	4390	L	3405
C	1860	M	280
D	2989	N	1480
E	1082	O	764
F	2010	P	452
G	517	Q	396
H	1205	R	1475
I	2890	S	310
J	1705	T	211

5.1.2 Main parts

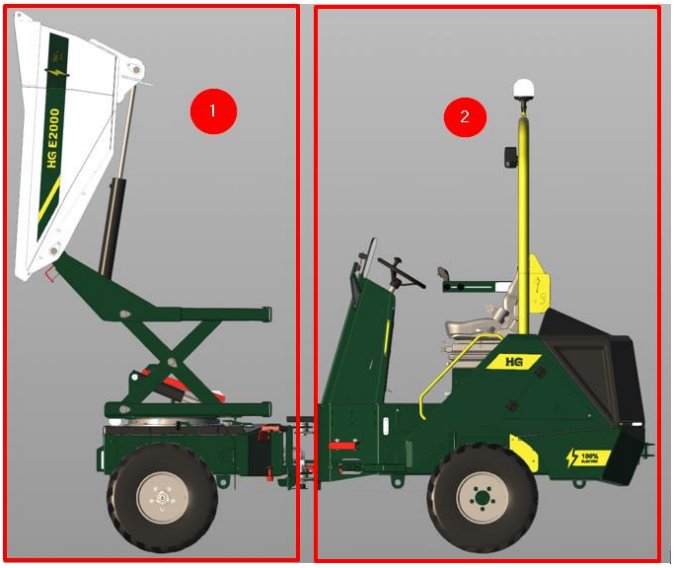

Figure 10: E2000 main parts

1: Front	2: Back

5.1.3 Main components

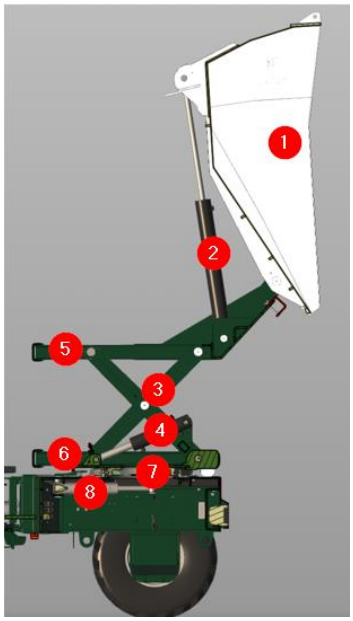

Figure 11: Main components - front

1: Container	2: Tip cylinder
3: Swivel arm	4: Lifting cylinder (h+v)
5: Top frame	6: Bottom frame
7: Turntable	8: Turning cylinder (h+v)

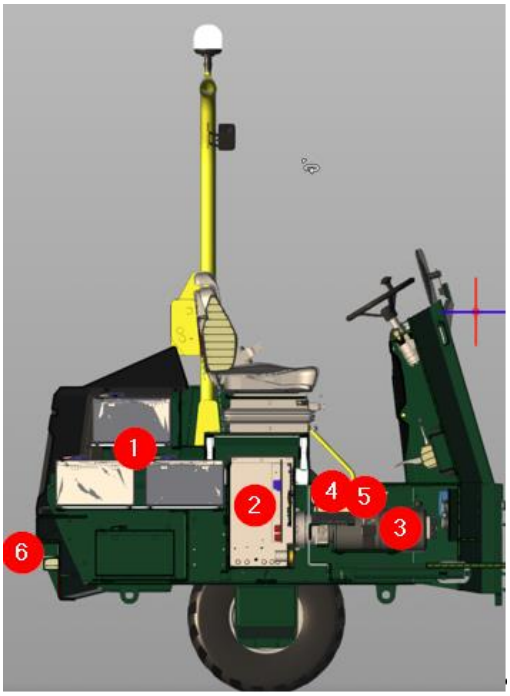

Figure 12: Main components - back

1: Battery pack	2: Fast charger
3: Hydraulic pump and tank	4: Main controllers (left side)
5: Slave controllers (right side)	6: Tow

5.2 EU Declaration of Conformity

EC declaration of conformity

according to the Machinery Directive 2006/42/EC, Annex II 1. A

Original

HG Bulk movement made easy.

The manufacturer bears the sole responsibility for issuing this declaration of conformity

HG Machines ApS

Bredgade 63 A st tv

DK - 1260 København

Person established in the Community authorised to compile the relevant technical documentation

Anders Bentzen

HG Machines ApS

Vejlevej 15

DK - 8722 Hedensted

Description and identification of the machinery

Product / Article	53.100 / Earth-moving machinery - Articulated dump truck
Type	HG E2000 HIGH TIP
Serial number	Open serial No. production
Project number	18729-2
Commercial name	HG E2000 HIGH TIP
Order	N/A
Model	HG E2000 HIGH TIP
Batch number	N/A
Function	Articulated Dumper E2000 can drive with up to 2 tons, while lithium batteries enables it to run for 12 hours – more than a full working day. This means that you can use Full recharge from 0-100% battery in less than 3.5 hours The complete four-wheel drive provides individual torque on all four wheels, making the machine off-road capable PRODUCT SPECIFICATIONS L x W x H: 3900 x 1426 x 2700 Weight: 1.980 kg. Volume: 800 L Payload kg: 2.000 kg. Unloading height: 167/117cm

It is expressly declared that the machinery fulfils all relevant provisions of the following EU Directives or Regulations:

2006/42/EC	Directive 2006/42/EC of the European Parliament and of the Council of 17 May 2006 on machinery, and amending Directive 95/16/EC (recast) Published in L 157/24 of 6/9/2006

Reference to the harmonised standards used, as referred to in Article 7 (2):

EN 60204-1:2018	Safety of machinery - Electrical equipment of machines - Part 1: General requirements (IEC 60204-1:2016, modified)
EN 1032:2003+A1:2008	Mechanical vibration - Testing of mobile machinery in order to determine the vibration emission value
EN ISO 12100:2010	Safety of machinery - General principles for design - Risk assessment and risk reduction (ISO 12100:2010)

Page 1/2

EC declaration of conformity

according to the Machinery Directive 2006/42/EC, Annex II 1. A

Original

HG Bulk movement made easy.

Reference to the harmonised standards used, as referred to in Article 7 (2):

EN ISO 13732-1:2008	Ergonomics of the thermal environment - Methods for the assessment of human responses to contact with surfaces - Part 1: Hot surfaces (ISO 13732-1:2006)
EN 1005-3:2002+A1:2008	Safety of machinery - Human physical performance - Part 3: Recommended force limits for machinery operation
EN 1570-1:2011+A1:2014	Safety requirements for lifting tables — Part 1: Lifting tables serving up to two fixed landings
EN ISO 3471:2008	Earth-moving machinery — Roll-over protective structures — Laboratory tests and performance requirements (ISO 3471:2008)
EN ISO 13850:2015	Safety of machinery - Emergency stop function - Principles for design (ISO 13850:2015)
EN ISO 13849-1:2015	Safety of machinery — Safety-related parts of control systems — Part 1: General principles for design (ISO 13849-1:2015)
EN ISO 13849-2:2012	Safety of machinery - Safety-related parts of control systems - Part 2: Validation (ISO 13849-2:2012)
EN ISO 4413:2010	Hydraulic fluid power — General rules and safety requirements for systems and their components (ISO 4413:2010)
EN ISO 7096:2020	Earth-moving machinery - Laboratory evaluation of operator seat vibration (ISO 7096:2020)
EN 474-6:2006+A1:2009	Earth-moving machinery - Safety - Part 6: Requirements for dumpers

Reference of the other technical standards and specifications used:

EN 474-1:2022	Earth-moving machinery - Safety - Part 1: General requirements
EN ISO 7010:2020	Graphical symbols - Safety colours and safety signs - Registered safety signs (ISO 7010:2019, corrected version 2020-06)
EN 474-6:2022	Earth-moving machinery - Safety - Part 6: Requirements for dumpers

København, 6/20/2023

Place, Date

Signature
Anders Bentzen
R&D Manager

Page 2/2

5.3 Description of functionalities

Image	Function	Description
	Raising	Hydraulically driven raising function.
	Lowering	Hydraulically driven lowering function.
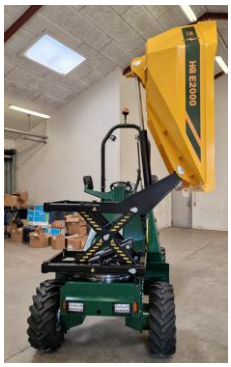 	Turning	A hydraulically driven turntable can turn the container 90 degrees to the left and right.
	Tipping	A hydraulically driven tip function.

5.4 Technical specifications

The overall technical specifications of the machine are given in Table 4.

5.5 Table 4: Technical specifications

Specifications	
Width	1480 mm
Length	3979 mm
Height (Operating mode, roll bar up)	2989 mm
Height (Transportation mode)	1910 mm
Own weight	2150 kg
Content in liters	892 L
Content in kg	2000 kg
Towbar (max) Pull load	900 kg
Unloading height (Low)	1210 mm
Unloading height (High)	1715 mm
Driving speed (Hare)	0-20 km/h
Driving speed (Turtle)	0-10 km/h
Reverse speed	0-20 km/h
Battery	
Lithium	360 Ah
Voltage	48V
Run time	12 hours
Temperature, charge	0°C to +55°C
Temperature, in use	-10°C to +60°C
Temperature, long-term storage	+15°C
Protection class (IPXX)	IP 54
Charger 1 –Fast charge – 160 A	
Plug	CEE 5P 16A
0-100% charging time	4,1 hours
20-80% charging time	2,6 hours
Integrated charger	10000 W

Charger 1 - Adapter type 2 car charger – 160 A	
Plug	CEE 5P 16A for type 2 car charger
0-100% charging time	4,1 hours
20-80% charging time	2,6 hours
Integrated charger	10000 W
Charger 2 – 35A	
Plug	230V plug standard EU
0-100% charging time	16 hours
20-80% charging time	10 hours
Integrated charger	1000 W
Motor	
Electric	PMAC three-phase electric motor 48V
Performance	3000 W
Moment (Rated)	9,5 Nm
Moment (Peak)	19,5 Nm
Moment (Instant)	41 Nm
Pulling wheels	
Dimensions	11.0/65x12/8 TL AS-504
Inches	12
Diameter	700
Width	273
Bar	4.0
Load/Kg	1400
Rim	8.50x12
Rolling circumference	2072
Other	
Container function	Hydraulic tip. Tip cylinder, double-acting
High tip	Hydraulic tip. 2x Tip cylinder, double-acting
Container rotation	Hydraulic tip. 2x Tip cylinder, double-acting
Hydraulic tank	10-liter Handel 46
Sound pressure	$L_{pa,\ eq}$ max = 81 dB(A)
Vibrations	Weighted arm/hand level max - 2.5 m/s^2

5.6 Warranty

Warranty period

HG Danmark APS provides a guarantee for 12 months. The warranty period begins on the date of delivery.

The warranty includes:

- Components that must be replaced or repaired due to material or manufacturing defects.
- The warranty does not cover wear and consumable parts such as:
  - Tires and hydraulic oil

The manufacturer's warranty expires if:

- The machine is misused.
- The machine is used without following the user manual and safety regulations.
- The machine is not maintained according to the instructions, or outdated spare parts are used.
- The machine is used after a fault has been detected, resulting in a more expensive repair than the original fault.

The owner's insurance should cover:

- Fire, burglary, theft, and vandalism.
- Water and frost damage.
- Damage caused by wind and weather.

The manufacturer's warranty does not apply in such cases.

Approval of compensation claims:

The manufacturer's approval of a compensation claim requires that the defective part be shown to the manufacturer or its representative within two weeks after the damage. Ownership of the damaged part(s) is transferred to the supplier of the new parts.

According to the warranty, it only replaces components. It, therefore, does not cover the following:

- Shipping costs.
- Costs related to waiting time, the machine owner's working time, and travel costs.
- Operating losses and other subsequent costs.

Other

Before repair under warranty, the manufacturer must be contacted to agree on the procedure. It is too late to claim the warranty if the repair has been initiated or completed. These warranty provisions can only be changed through a separate agreement.

5.7 Machine use

5.7.1 User requirements and restrictions

The operator of the HG E2000 must meet the following requirements and restrictions:

- The instructions must be read carefully. The operator must know all the machine's functions and their correct use, as well as knowledge of controls, switches, etc.
- The operator must be at least 18 years old and have a normal state of mind and ability to use the dumper. Please note that the legislation in the individual country may specify a different age limit for persons who may use the dumper in given situations.
- The operator is responsible for accidents or any dangerous situations that may occur to other people and their property.
- The operator must have adequate instructions on the use of the dumper. These instructions should emphasize the following:
    - The importance of being careful and concentrated when working with self-propelled machines.
    - The operator must have a good overview of the machine's surroundings - especially where other people may be walking.

5.7.2 Intended use

The machine will be used to transport building materials and waste. The machine is operated by a seated operator who must meet the requirements mentioned in section 4.6.1, User Requirements and Restrictions.

It is permitted to drive the machine on construction sites, areas without road surfaces, and public roads (see section 6.5.8.1 Requirements for driving on public roads).

5.7.3 Unintended use

The machine may not be used for the following:

- It may not be operated by persons who do not know the machine's functions or are below 18 years old.
- Do not transport with a raised container.
- Do not use it to tow other vehicles.
- Do not use it in case of insufficient ceiling height.
- Do not use in ATEX areas.
- It must not be used to lift people in the container
- It must not be used to transport people other than the operator
- May not be used for underground work (e.g., mining)
- Do not use in areas where there is insufficient lighting or daylight.
- It may not be used to transport materials weighing more than 2,000 kg.

- It may not be used to tow more than 900 kg.
- Do not use it if the machine is damaged (Reduced functionality or apparent damage).
- Do not drive on uneven or steep surfaces that exceed the design limitations.
- Must not be used if all applicable regulations (cf. applicable legislation) and regulations on building sites are not observed.

5.8 Supplied equipment

Table 5 contains an overview of the equipment delivered with the HG E2000.

Table 5: Overview of supplied equipment

Picture	Equpment
	Charging cable with extension for charger (CEE type)
	Safety bracket for tipping cylinder on container
	Safety bracket for the swivels
	Safety bracket for swivel cylinders on swivel joints (1 on each side of the machine)

6. 5. Residual hazard

#	Image	Residual hazard description
1	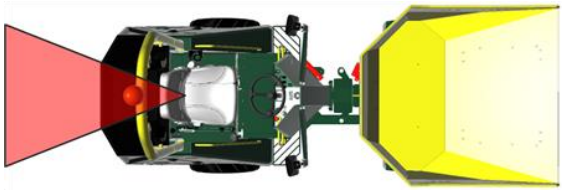 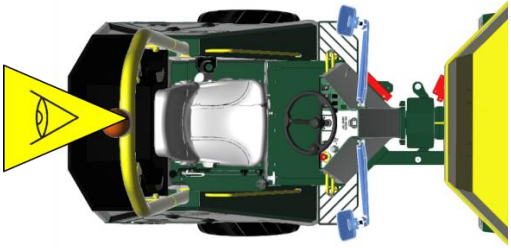	Persons standing/working behind the machine risk being run over when the vehicle reverses and the operator does not detect them due to inattention or inability to see them. The operator must orient himself with the help of side mirrors and look behind in the blind spot.
2		The operator risks being thrown out of the seat if the safety belt is not on and tightened sufficiently.
3	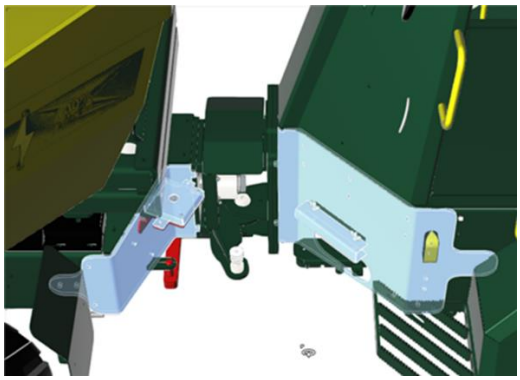 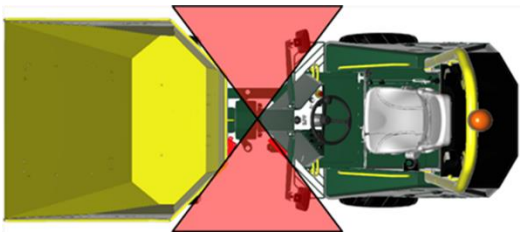	Risk of crushing in the area around the swivel joint (marked surfaces). The danger is present on both the left and right sides of the pivot joint when the surfaces approach each other.

4	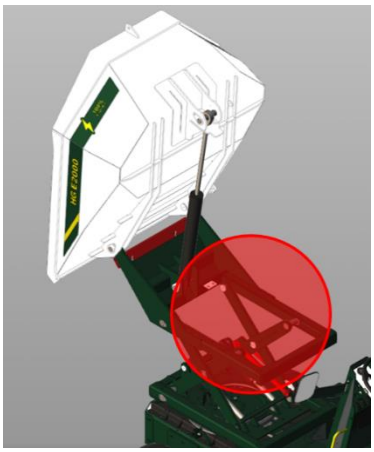 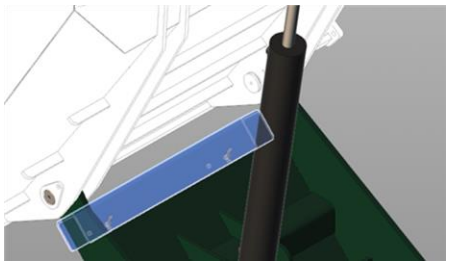 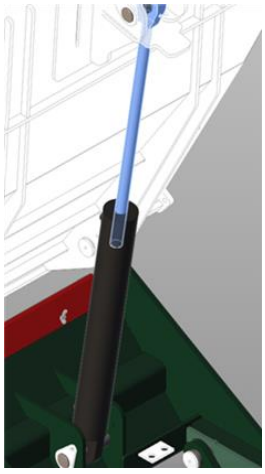	When carrying out maintenance with the container in the tilting position, there is a risk that the hydraulic cylinder that pushes the container up may have a pressure drop from repair work carried out on the hydraulic system or a leak in the design, causing the container to drop suddenly. If the operator works underneath, there may be a risk of crushing the upper body, arms, or hands. 
5	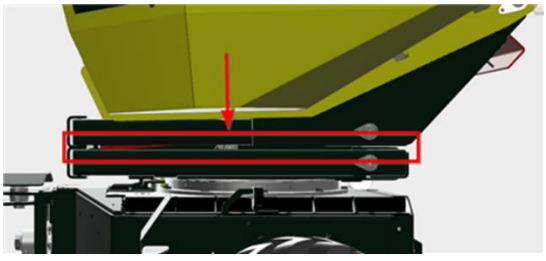	When the container is lowered, there is a risk of crushing fingers and hands between the bottom and top frame. 

6	  	Risk of crushing fingers, hands, and arms between the swivel arms when the container is lowered, or service work is carried out on the hydraulic system. When servicing or cleaning, safety fittings must be installed.

7. Transport, use, and operation of the machine

7.1 Machine transport/towing

7.1.1 Transport

To transport the machine, carry out the following points:

1. Adjust the yellow bracket mounted on the container (see Figure 13) to engage the galvanized bracket just below the swivel base when the container is down.
2. Lower the container to a normal position to lock the rotating part of the container with the fixed part of the frame.

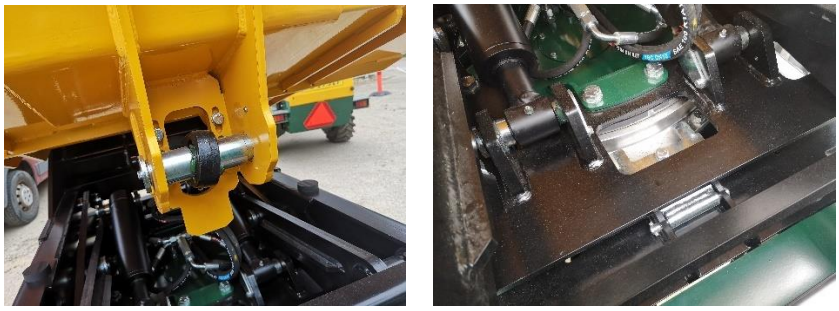

Figure 13: Rotation lock under container

1. Drive the machine onto the bed of the means of transport.
2. Fasten the machine by attaching transport straps to the fastenings of the machine on both sides (see Figure 14) and the fixing brackets on the means of transport.

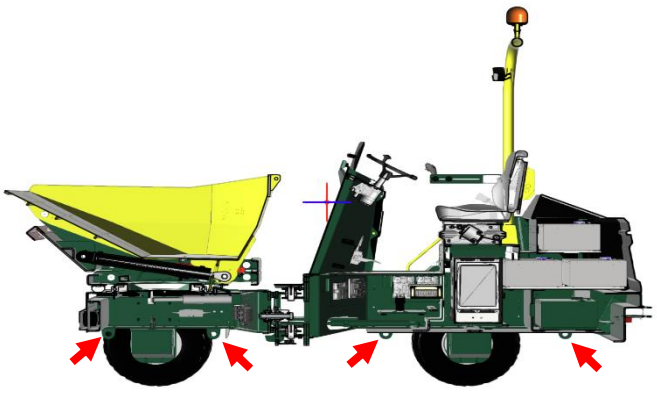

Figure 14: Position on the machine (left side)

3. Mount the safety brackets on the pivot cylinder on both sides of the machine (see Figure 15 and Figure 16)



Figure 15: Safety fittings

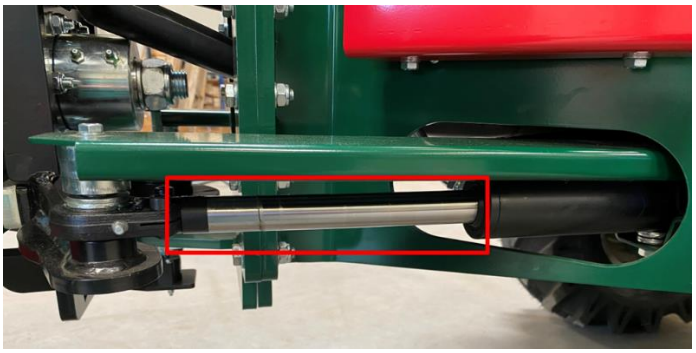

Figure 16: Placement of safety bracket on the swivel joint

4. Lower the crash bar (see Figure 17).



Figure 17: Crash bar lowered

5. Ensure that the machine's ignition key and main switch are OFF.
6. Ensure that the machine is clamped correctly.

7.1.2 Towing

In case of a malfunction of the machine and need for towing, do the following to release the EM brakes:

1. Check that the machine's main switch and ignition key are ON.
2. Find the “Top Gun” button in the charger compartment (see Figure 18).



Figure 18: Charger compartment

3. Turn on the “Top Gun” button by pushing the button up (see Figure 19)

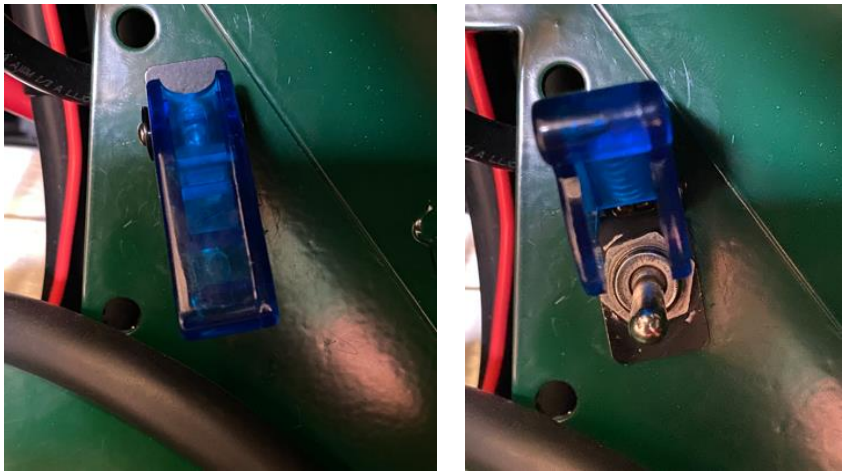

Figure 19: “Top Gun” button

4. The machine can now either be pulled or pushed.
5. Important to not tow the machine in the towbar, but tow in fixing brackets illustrated in Figure 14 (see page 29).

If the battery packs do not work, contact HG Machines for instructions on towing the machine.

7.2 Operating space

The machine's operating position consists of the operator's seat, joystick, instrument panel, and pedals.

Operator seat

The operator's seat is a sprung seat that can be adjusted to the individual operator. The seat has a safety belt, which must be used when operating the machine (see Figure 20).



Figure 20: Operator seat

Joystick

The joystick is located on an armrest next to the operator's seat. Here, you can control the machine's primary functions: raising, lowering, turning, tipping, driving forward, and reversing, as well as placing in neutral mode (see Figure 21).



Figure 21: Joystick

Instrument panel

The instrument panel is behind the steering wheel (see Figure 22). On the left side of the panel are the machine's various light functions (hazard indicator, work light, driving light, and rotor indicator) and the speed function (hare/turtle). On the right side of the panel are the emergency stop, the activation button, the turn signal light, and the ignition key. At the top of the panel is the info display, on which you can find information about the battery level, speed indication, direction of travel, and the number of operating hours.

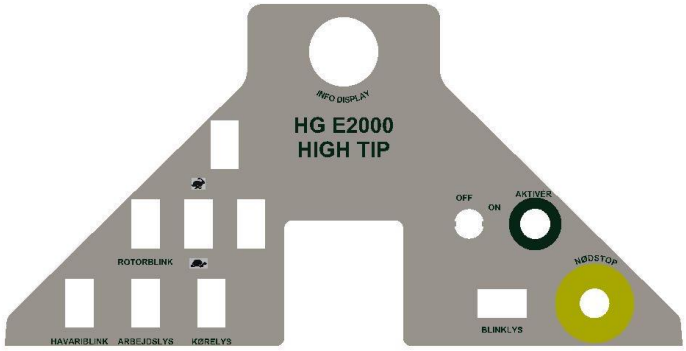

Figure 22: Dashboard

Pedals

The pedals consist of a brake pedal (left) and an accelerator pedal (right) (see Figure 22).



Figure 23: Accelerator and brakes

7.3 Emergency stop – Use and location on the machine

Image	Name	Placement	Instructions
	Emergency stop	It is located on the right side of the instrument panel.	Press the button down to activate the emergency stop.

7.3.1 Scope of emergency stop

All wheel motors on the machine brake when the emergency stop is activated. As all the wheel motors brake, the machine stops immediately in a hard braking. It is, therefore, not possible to drive further, nor is it possible to use other functions. To reset the emergency stop, refer to section 7.7.4, Starting up after an emergency stop.

7.4 Information during operation

7.4.1 Visual information/warnings

Image	Name	Explanation
	Info display	The info display provides information on battery level, speed indication, direction of travel, and the number of operating hours.
	Rotor lights	Rotor lights alert you that the machine is a slow-moving vehicle. Turned on during use.
 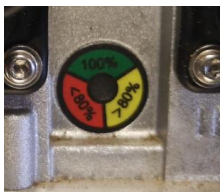	Battery indicators	Fast charger: The display shows the battery level. Small charger: The diode's color shows the battery's charge status.
	Warning triangle	Public road driving (reflex).
	Hazard lights	Warning of, for example, an emergency engine stop, where the machine could be dangerous to traffic.

7.4.2 Acoustic warnings

Pictogram	Explanation	Meaning
	Acoustic warning when reversing	The acoustic warning is function dependent. The sound starts when the machine is put into reverse gear.
	Horn	The horn makes nearby people aware of the machine's presence.

7.5 Normal use

7.5.1 Electrical supply (supply separator)

Image	Name	Explanation	Use
	Main switch	Switching on and off the electrical supply to the machine's electrical system.	The main switch is used when starting the engine, storing for extended periods, or carrying out service/maintenance.

7.5.2 Filling up the container

When the container is to be filled with material, the focus must be on:

- Even the weight distribution of the material.
- The loading height from the 3rd party machine must be as low and as close to the container as possible to avoid damage. Damage is more likely if the material is loaded from a greater height.
- That liquid materials will slop a lot when transported and pose a high risk of spillage.

7.5.3 How to operate the machines functions

Image	Function	Placement	Use/Activation
	Tipping - forward	Joystick	Press the button to tip the container forward.
	Tipping	Joystick	Press the button to return the container to its normal position.
	Lifting	Joystick	Press the button to raise the container.
	Lowering	Joystick	Press the button to drop the container.
	Turning left	Joystick	Press the button to rotate the container to the left or return it to its normal position.

	Turning right	Joystick	Press the button to rotate the container to the right or return it to its normal position.
	Forward driving	Joystick	Press the button to drive forward.
	Reverse driving	Joystick	Press the button to reverse.
	Neutral	Joystick	Press the button either up or down to bring the machine into neutral mode.
	Hazard warning lights	Instrument panel	Press the top part of the button down to turn on the hazard warning lights. The red light on the button will now light up. Press the lower part of the button to turn off the hazard warning lights.

	Working lights	Instrument panel	Press the top part of the button down to turn on the work light. Press the lower part of the button down to turn off the work light.
	Driving lights	Instrument panel	Press the top part of the button down to turn on the daytime running lights. Press the lower part of the button down to turn off the headlights.
	Rotor lights	Instrument panel	Press the top part of the button down to turn on the rotor lights. Press the lower part of the button down to turn off the rotor lights.
	Speed indicator	Instrument panel	Press the top part of the button down to run fast (hare). Press the lower part of the button down to drive slowly (turtle).
	Info display	Instrument panel	The info display provides information on battery level, speed indication, direction of travel, and the number of operating hours.

	Ignition	Instrument panel	Turn the key to ON to release the machine for operation. Turn the key to OFF to block the machine from operation.
	Activate button	Instrument panel	Hold the button down to start the machine.
	Emergency stop	Instrument panel	Press the button down to activate the emergency stop.
	Signal lights	Instrument panel	Press the left side of the button to signal left. Press the right side of the button to signal right.
	Main witch	To the right side of the operator's seat	Turn the switch to the right to switch on the electrical supply. Turn the switch back to the left to disconnect the electrical supply.
	OADC	Placed inside the E2000	Using the app, you can get live updates from the machine on GPS position, power consumption, and the number of operating hours. This is add-on equipment, so contact HG Machines for more information.

7.5.4 Unloading the container

Before unloading begins, ensure the machine is on an even and level surface. This is done by checking that the air bubble on the spirit level is visually intact (see Figure 24).



Figure 24: Spirit level

Unloading position 1



Unloading position 2a



Unloading position 2b



Unloading position 3

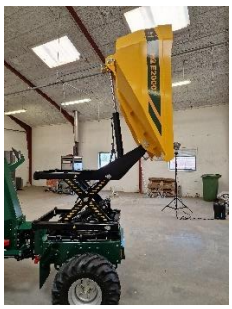

Unloading position 4a



Unloading position 4b



Figure 25: Unloading positions

7.5.4.1 Unloading position 1

1. To unload in position 1 (see Figure 26), do the following:



Figure 26: Unloading position 1

a. Press the top tip button on the joystick to tip the contents of the container (see Figure 27).



Figure 27: Top tip button

b. Press the bottom tip button on the joystick to return the container to its normal position (see Figure 28)



Figure 28: Bottom tip button

7.5.4.2 Unloading position 2a

2. To unload in position 2a (see Figure 24), do the following:



Figure 29: Unloading position 2a

a. Press the top rotate button on the joystick to rotate the container to the right (see Figure 30).



Figure 30: Top rotator button

	If the material to be filled in the container can freeze to the container or has an adhesive property, then the amount of the material must be halved.

b. Press the top tip button on the joystick to tip the contents of the container (see Figure 31).



Figure 31: Top tip button

c. Press the bottom tip button on the joystick to return the container to its normal position (see Figure 32).



Figure 32: Bottom tip button

d. Press the joystick's lower rotate button to return the container to its normal position (see Figure 33).



Figure 33: Button rotator button

7.5.4.3 Unloading position 2b

3. To unload in position 2b (see Figure 34), do the following:



Figure 34: Unloading position 2b

a. Press the lower rotate button on the joystick to rotate the container to the left (see Figure 35).



Figure 35: Bottom rotator button

	If the material to be filled in the container can freeze to the container or has an adhesive property, then the amount of the material must be halved.

b. Press the top tip button on the joystick to tip the contents of the container (see Figure 36).



Figure 36: Top tip button

c. Press the bottom tip button on the joystick to return the container to its normal position (see Figure 37).



Figure 37: Bottom tip button

d. Press the top rotate button on the joystick to rotate the container back to its normal position (see Figure 38).



Figure 38: Top rotator button

7.5.4.4 Unloading position 3

4. To unload in position 3 (see Figure 39), do the following:

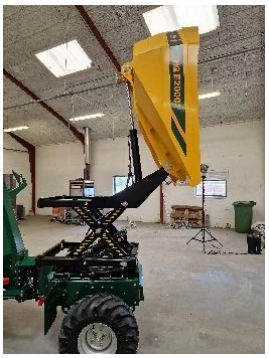

Figure 39: Unloading position 3

a. Press the upper swivel button on the joystick to raise the container to the desired height (see Figure 40)



Figure 40: Upper swivel button

b. Press the top tip button on the joystick to tip the contents of the container (see Figure 41).



Figure 41: Top tip button

c. Press the bottom tip button on the joystick to return the container to its normal position (see Figure 42).



Figure 42: Bottom tip button

d. Press the lower swivel button on the joystick to lower the container back to its normal position (see Figure 43).



Figure 43: Lower swivel button

7.5.4.5 Unloading position 4a

5. To unload in position 4a (see Figure 44), do the following:



Figure 44: Unloading position 4a

a. Press the upper swivel button on the joystick to raise the container to the desired height (see Figure 45)



Figure 45: Top swivel button

b. Press the lower rotator button on the joystick to rotate the container to the left (see Figure 46).



Figure 46: Bottom rotator button

	If the material to be filled in the container can freeze to the container or has an adhesive property, then the amount of the material must be halved.

c. Press the top tip button on the joystick to tip the contents of the container (see Figure 47).



Figure 47: Top tip button

d. Press the bottom tip button on the joystick to return the container to its normal position (see Figure 48).



Figure 48: Bottom tip button

e. Press the top rotator button on the joystick to rotate the container back to its normal position (see Figure 49).



Figure 49: Top rotator button

f. Press the lower swivel button on the joystick to lower the container back to its normal position (see
Figure 50).



Figure 50: Bottom swivel button

7.5.4.6 Unloading position 4b

6. To unload in position 4b (see Figure 51), do the following:



Figure 51: Unloading position 4b

a. Press the top swivel button on the joystick to raise the container to the desired height (see Figure 52).



Figure 52: Top swivel button

b. Press the top rotate button on the joystick to rotate the container to the right (see Figure 53).



Figure 53: Top rotator button

	If the material to be filled in the container can freeze to the container or has an adhesive property, then the amount of the material must be halved.

Press the top tip button on the joystick to tip the contents of the container (see Figure 54).



Figure 54: Top tip button

c. Press the bottom tip button on the joystick to return the container to its normal position of the container (see Figure 55).



Figure 55: Bottom tip button

d. Press the joystick's lower rotate button to return the container to its normal position (see Figure 56).



Figure 56: Bottom rotator button

e. Press the lower swivel button on the joystick to lower the container back to its normal position (see Figure 57).



Figure 57: Bottom swivel button

7.5.5 Charging

7.5.5.1 Charger #1 (Fast charge)

When the machine needs to be charged with fast charging, do the following:

1. Check that the main switch is in the OFF position.
2. Open the hatch to the charging compartment (see Figure 58).



Figure 58: Charging compartment

3. Connect the extension to the charging cable (see Figure 59).



Figure 59: Charging cable with extension

4. 4. Connect the plug to the mains.
5. Check on the battery indicators that the battery is charging (see Figure 60).



Figure 60: Battery indicators and explanations

6. When the battery is fully charged, disconnect the plug and close the door to the charging compartment.

7.5.5.2 Fast charge with Adapter type 2 car charger

When the machine needs to be charged with a type 2 car charger, do the following:

1. Check that the main switch is in the OFF position.
2. Open the hatch to the charging compartment (see Figure 586).



Figure 61: Charging compartment

1. Connect the type 2 car charger

2. Press the switches on the charger to position "I" to start charging (see Figure 62).



Figure 62: Switches on charger

3. Check on the battery indicators that the battery is charging (see Figure 63).



Figure 63: Battery indicators and explanations

4. When the battery is fully charged, disconnect the plug and close the door to the charging compartment.

7.5.5.3 Charger 2 (Power plug)

When the machine needs to be charged using the power plug, do the following:

1. Check that the main switch is in the OFF position.
2. Open the door to the charging compartment (see Figure 64).



Figure 64: Charging compartment

3. Connect the plug to the mains.
4. Check on the battery indicators that the battery is charging (see Figure 65)



Figure 65: Battery indicators and explanations

5. When the battery is fully charged, disconnect the plug and close the door to the charging compartment.

7.5.6 Preparing for use

Before putting the machine into service, the following must be checked:

- Ensure the machine complies with all points in section 8.1.1 Maintenance.
- Ensure the machine is sufficiently charged. HG Machines does not recommend driving with less than 15% battery capacity. Battery capacity can be read in the info display.
- Ensure the machine has enough hydraulic oil filled for the tip of the container, the HIGH TIP, the rotator function, and the control cylinder.
- If necessary, fill up hydraulic oil. For instructions on filling hydraulic oil, go to section 8.2.2 Filling up hydraulic oil.

7.5.7 Tire pressure and maintenance

To achieve optimal ergonomic conditions, all four machine tires must have the correct air pressure, and the wheel bolts must have the proper tightening torque.

Tire pressure: 4.0 bar

Bolt torque: 86Nm

7.5.8 Driving

	Remember to disconnect the charger before starting up and using the machine.

1. Check that the machine is neutral on the joystick (see Figure 66).



Figure 66: Neutral mode

2. Turn the main switch to the ON position (see Figure 67).



Figure 67: Main switch

3. Turn the ignition key to the ON position (see Figure 68).



Figure 68: Ignition key in ON position

4. Press the activation button **until it lights green** (see Figure 69).



Figure 69: Activation button

5. Place left hand on the steering wheel
6. Place your right hand on the joystick (See Figure 70).



Figure 70: Joystick

If the machine is to move forward, press the button on the joystick (see Figure 71).



Figure 71: Forward button

	Reversing requires thorough orientation to the rear before starting the movement. The operator is responsible for having an overview of the machine's surroundings.

7. If the machine is to move backward, press the button on the joystick downwards, and the reversing alarm will begin to sound (see Figure 72).



Figure 72: Reversing button

8. Select the desired speed on the instrument panel (see Figure 73).



Figure 73: Speed button

9. Press the gas pedal with your foot to drive the machine (see Figure 74).



Figure 74: Accelerator

7.5.8.1 Requirements for driving on public roads

Driving on public roads must be done per the applicable legislation.

7.5.8.2 Safety restrictions when driving

Pictogram/Image	Explanation
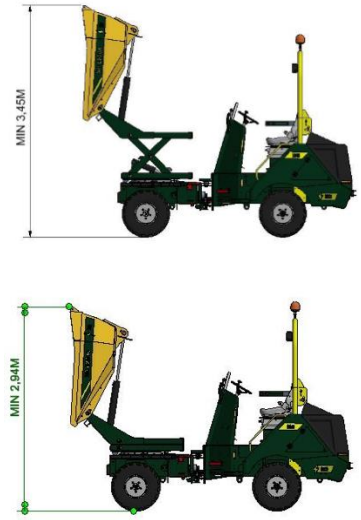	Do not use dumpers with insufficient ceiling height.
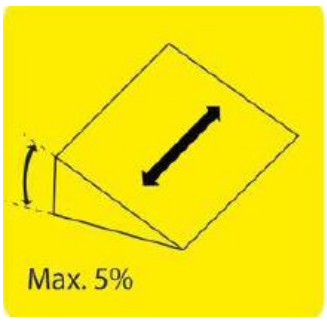	Do not drive up along slopes exceeding 5% (2.85 degrees)
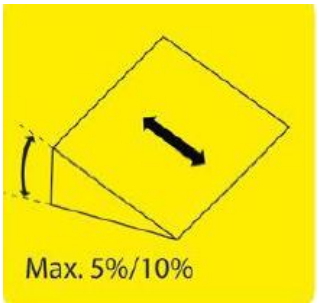	Do not drive across slopes that exceed: • 10% (5.71 degrees) on hard surfaces such as concrete and asphalt. • 5% (2.85 degrees) on stuck surfaces such as gravel and grass

7.6 Cleaning

In terms of cleaning and everyday use

- Always ensure the machine is clean and in order so the operator is always ergonomically positioned.
- Always lock the charging compartment and the tool compartment when not in use.

7.6.1 Safety steps while cleaning

For your safety when cleaning, make sure of the following:

- Never use a high-pressure cleaner to clean the machine, as this can damage the machine's electrical components.
- Never put water directly on the electrical components of the machine.
- Running water and a brush can be used on all the machine's steel parts.
- The machine must not be placed in a car wash.

7.7 Safety while operating

7.7.1 Built-in functionality limitations

Image	Explanation
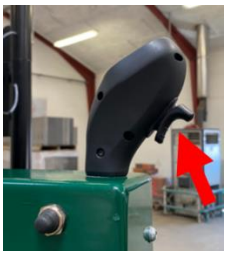	When the machine is in neutral mode, it is impossible to drive or push it.
	A sensor at the charging compartment registers whether the door to the compartment is open or closed. If the door is open, it is impossible to drive the machine. However, it is possible to raise/lower and tip the container.

7.7.2 Other safety notes

Image	Explanation
	Safety bracket for tipping cylinder on container.
	Safety bracket for the swivel.

	Safety bracket for swivel cylinder on swivel joint (1 on each side of the machine).
	Level indicator to use when unloading.

7.7.3 Start-up after a regular stop

To start the machine after a regular stop, refer to 7.5.8 Driving

7.7.4 Starting up after an emergency stop

If the emergency button (big red) has been activated, do the following to start the machine:

1. Ensure the emergency stop's reason is clarified, and no further danger is present.
2. Turn the emergency button to the right to release the emergency stop (see Figure 75).



Figure 75: Turning the emergency button

3. Turn the ignition key to the OFF position (see Figure 76).



Figure 76: Ignition key in OFF position

4. Turn the ignition key to the ON position (see Figure 77).



Figure 77: Ignition key in ON position

5. Press the activate button (see Figure 78).



Figure 78: Activate button

7.7.5 Start-up after service/repair

For starting up the machine after service/repair, refer to section 7.5.8 Driving.

7.7.6 Freeing a person in the event of an overrun or jam

To free a person in the event of an overrun or jam:

- Create an overview and assurance of the situation.
- Create access to first aiders and therapists.
- If the emergency stop is activated and the machine must be started up, refer to section 7.7.4 Starting up after an emergency-stop.
- If the machine must be started up to be moved, refer to section 7.5.8 Driving.

7.8 Troubleshooting/FAQ

Error	Possible cause	Troubleshooting
The machine will not start	The machine is not switched on, lacks power, or the compartment door is open. The emergency stop button has been triggered.	Check the main switch, ignition key, info display, and the activation button lights up green. Also, check that the compartment door is closed and locked. The emergency stop must be deactivated or is defective.
The machine will not run	Activation Button, Joystick, Compartment Door, “Top Gun” Button.	The activation button must light up green, the joystick's rocker switch must be in position N (neutral), the “Top Gun” button must be activated, and the compartment door must be closed.

The machine blocks one or more wheels	The activation button and emergency stop button have been triggered.	The activation button is not pressed. Restart the machine—contact service. The emergency stop must be deactivated or is defective.
The machine is too heavy to control	Air pressure in wheels, hydraulics.	Check that the air pressure in the wheels is correct. Check that there is enough oil in the hydraulic tank.
The machine rolls when parking	“Top Gun” button	Check that the top gun button is off and closed.
The container will not tip up	Hydraulic motor, joystick.	Hydraulic oil, run the hydraulic motor and check the joystick wiring and connections. Restart the machine.
The container will not tip down	Hydraulic motor, joystick, hose valve break.	Hydraulic oil, run the hydraulic motor and check the joystick wiring and connections. The hose break valve is defective. Restart the machine.
Container swivel will not raise	Hydraulic motor, joystick.	Hydraulic oil, run the hydraulic motor and check the joystick wiring and connections. Restart the machine.
Container swivel will not lower	Hydraulic motor, joystick, hose valve break.	Hydraulic oil, run the hydraulic motor and check the joystick wiring and connections. The hose break valve is defective. Restart the machine.
Container rotation right and left	Hydraulic motor, joystick.	Hydraulic oil, run the hydraulic motor and check the joystick wiring and connections. Restart the machine.
The hydraulic system lacks power	Hydraulic motor, hose valve break.	The hydraulic motor does not run, lacks hydraulic oil, leaking hydraulic hoses.
The machine's functions work, but the engine cannot run	Activation contact. Main relay.	The activation button is not pressed or defective. The main relay does not receive power or is faulty.

8. Service, repair, and maintenance

8.1 General

The machine operator and the service shop can handle the machine service.

Machine operator:

- Daily maintenance items are listed in Table 6.

Service shop:

- Checklist for HG E2000
- Machine repair
- Replacing of spare parts

8.1.1 Maintenance

Table 6 lists the individual maintenance points for the HG E2000 and HG E2000 High Tip and when maintenance points should be carried out.

In addition to HG Machine's maintenance points, the Checklist for HG Machines HG E2000 and HG E2000 High Tip must be done according to order no. 1109 of 15.12.1992. Only authorized service workshops may carry out service on the HG E2000. Contact HG Machines for information about a service workshop.

Table 6: Maintenance list for HG E2000 HIGH TIP

Activity		For every xx operating hours					
		Daily	20 hours	150 hours	300 hours	3 months	6 months
Control	Battery capacity display	x					
	Safety harness	x					
	Roller bar	x					
	Tire pressure	x					
	Main switch	x					
	Emergency stop function	x					
	Hydraulic condition	x					
	Hydraulic leaks	x					
	Joystick	x					
	Forward, neutral, and reverse buttons	x					
	Reverse alarm indicator	x					
	Tip container	x					

	High tip swivel	x					
	Container rotation	x					
	Signal horn	x					
	Instrument buttons	x					
	Driving lights	x					
	Brake lights	x					
	Flashing lights	x					
	Warning lights	x					
	Working light	x					
	Rotor lamp	x					
	Motor leaks	x					
	Warning signs intact	x					
	Compartment room locked	x					
	Tool room locked	x					
	Bolts and nuts tightened	x					
	Safety bracket intact	x					
	Wheel bolts	x					
Lubrication	Cylinders	x					
	Turn joints	x					
Cleaning	Dirt and other objects under the container	x					
	Dirt and other objects in the instrument panel	x					
	Dirt and other objects near the driver	x					
Service workshop	The checklist for maintenance is reviewed			x		x	

8.1.2 Spare parts

Spare parts for HG E2000 and HG E2000 High Tip can be ordered on the HG Machine web shop – www.hg-machines.com

8.1.3 Safety during repair/maintenance

For safety during repair and/or maintenance, always fit the safety fittings; refer to section 6.7.2 Other safety notes. If cutting or welding is to be done in the machine, the machine must be completely shut down, and the blue connectors on the battery packs must be removed. Refer to section 8.1, Storing points 1 to 2.

8.1.4 Disposal of replaced parts

Before disposal, the replaced machine parts must be sorted by material type. This means steel separately, rubber gaskets separately, etc. The different types of material are then disposed of following the legislation in force at any given time.

8.2 Lubricating moving parts and filling with hydraulic oil

8.2.1 Lubrication of moving parts

For lubrication of moving parts, see Figure 79 to Figure 82 for which parts need to be lubricated and where on the machine they are located. The moving parts must be lubricated with a grease gun. For information on the frequency of lubrication of the moving parts, refer to section 8.1.1 Maintenance list.



Figure 79: Joints to lubricate



Figure 80: Grease nipple under container by rotation lock

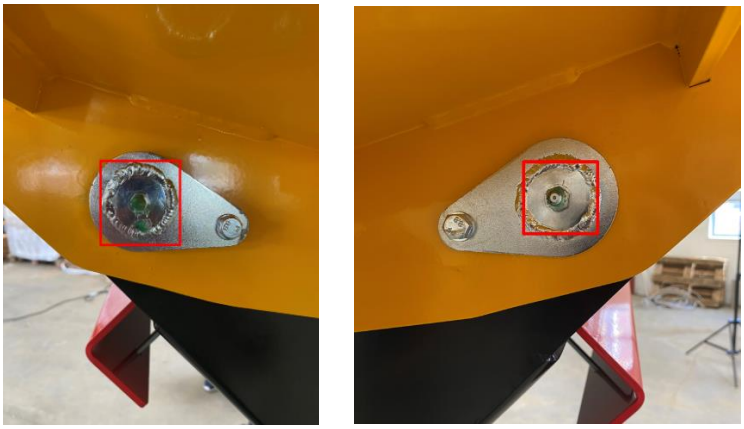

Figure 81: Grease nipples on the right and left side of the container

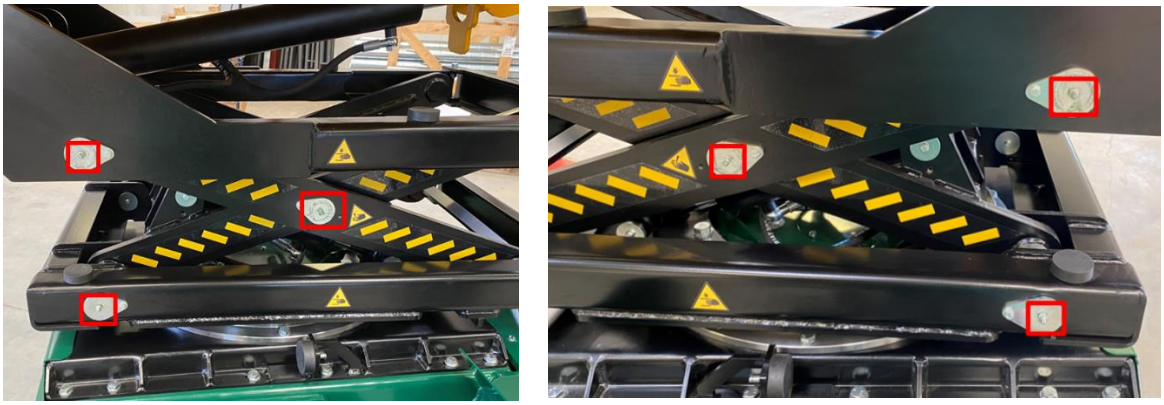

Figure 82: Grease the nipples on the right and left side of the swivel arms

8.2.2 Filling up hydraulic oil

To fill hydraulic oil, carry out the following points:

	Never remove the cover from the hydraulic tank or add hydraulic oil while the engine or hydraulics are running or hot.

1. Turn the ignition key and main switch to the OFF position (see Figure 83)

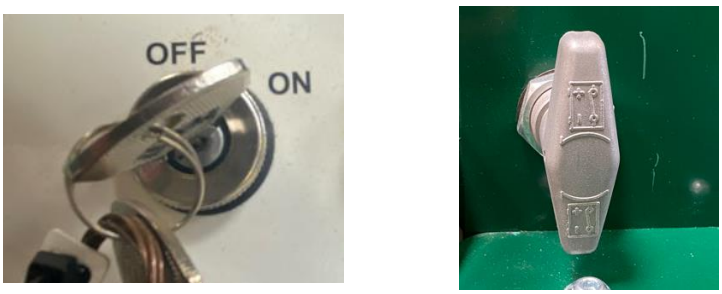

Figure 83: Ignition key and main switch

2. Remove the footplate (see Figure 84).



Figure 84: Footplate

3. Remove the cover of the hydraulic tank (see Figure 85).

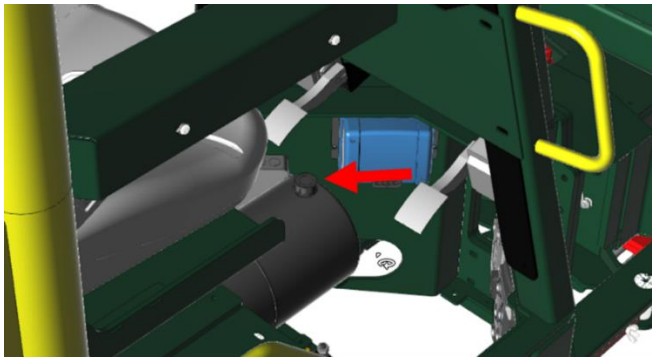

Figure 85: Hydraulic tank cover

4. Fill hydraulic oil in the hydraulic tank.
5. Put the cover back on the hydraulic tank.
6. Put the foot plate back in place.

8.2.3 Security regarding lubrication and filling

8.2.3.1 Security regarding the lubrication

Always pay attention to the following when lubricating the machine

- The machine should always be placed horizontally on stable grounds with easy access to the lubrication spots. Alle lubrications spots are placed so they can be reached from the ground.
- Never climb the machine when lubricating.
- HG recommends using a lubrication tube with a tube of minimum 20mm. For how to lubricate please see 8.2.1. Lubrication of moving parts.

8.2.3.2 Safety when filling up hydraulic oil

When filling up the hydraulic oil, pay attention to the following:

- In case of hydraulic oil spillage, do not attempt to switch on the machine until the spilled hydraulic oil on the machine has dried off and/or up.
- Hydraulic oil can create very slippery surfaces and can thus increase the risk of breakdowns while driving.
- If hydraulic oil gets on the skin, the skin should be washed thoroughly with soap. If irritation persists, contact a doctor.
- Ingestion of hydraulic oil is dangerous to life.

9. Storage & disposal

9.1 Storage

In conditions where the machine is to be stored without operation over a more extended period, HG recommends that the machine's battery pack be placed in "storage mode" and with a minimum of 40% power on the battery pack. If the machine does not have a minimum of 40% power on the battery pack at the time of recommendation, it must be charged here or above. The machine's current power level can be read on the battery indicator mounted in the instrument panel (See Figure 86).



Figure 86: Info display

When the machine's battery pack has reached a current level of at least 40%, do the following:

6. Remove the backplate for the battery compartment by lifting the elongated hole by loosening three hand screws on each side of the machine in the charger compartment and the tool compartment, respectively (see Figure 87 or Figure 88).

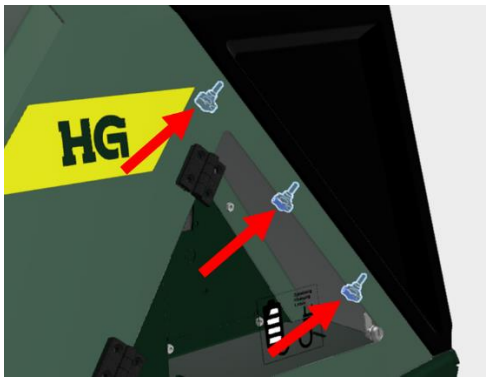

Figure 87: Screw positioning



Figure 88: Backplate

7. Pull apart the blue plug on the battery packs consisting of two counterparts (see Figure 89).

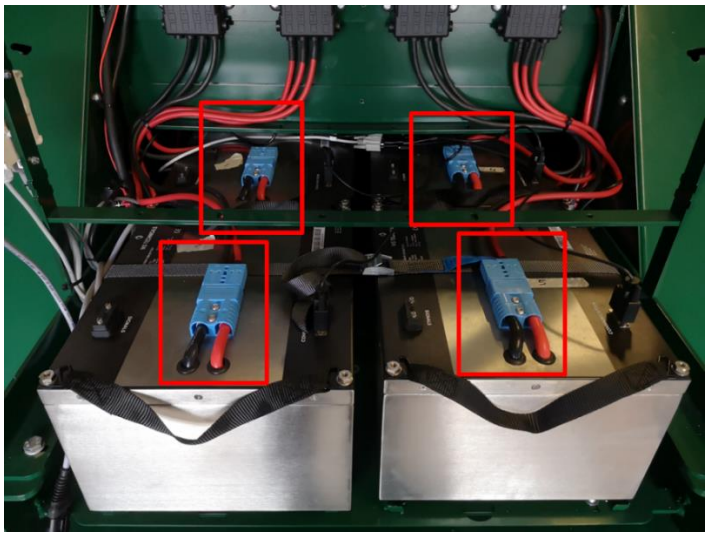

Figure 89: Blue plug on batteries

8. Disconnect the gray or black COM connector from all battery packs (See Figure 90)

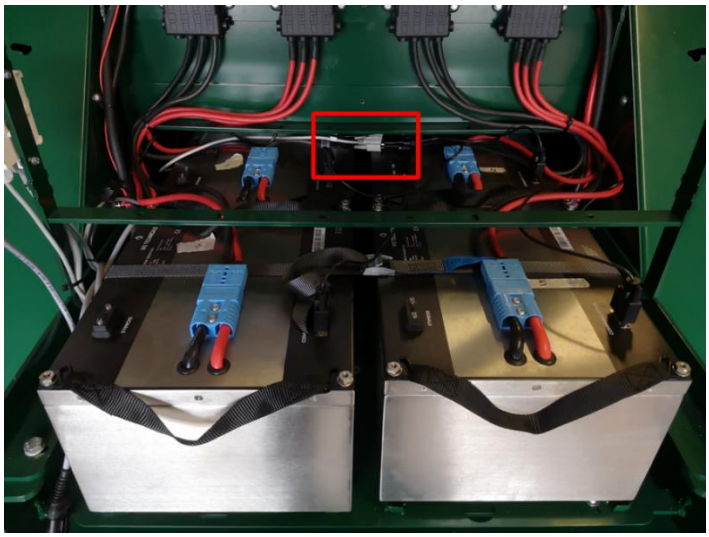

Figure 90: COM-plug

9. Fit the backplate on the battery compartment again.

Once the tasks above are completed, the machine will automatically go into "storage mode" as it will not detect any discharge. In "storage mode," the battery pack will only consume 1-2% of operation-ready level mode. However, the battery must be inspected every 2-3 months and recharged to a minimum of 40%. When the battery pack needs to be recharged, or the machine needs to be used, connect the blue and COM connectors again.

9.2 Disposal

When the HG E2000 is worn out and must be disposed of, HG carries out dismantling by agreement, as it should be done in an environmentally sound manner. When dismantling, the machine parts are sorted by material type. This means steel separately, rubber gaskets separately, etc. The various types of material are then disposed of per the applicable legislation.

10. Appendix

10.1 Diagrams

10.1.1 Electric diagram

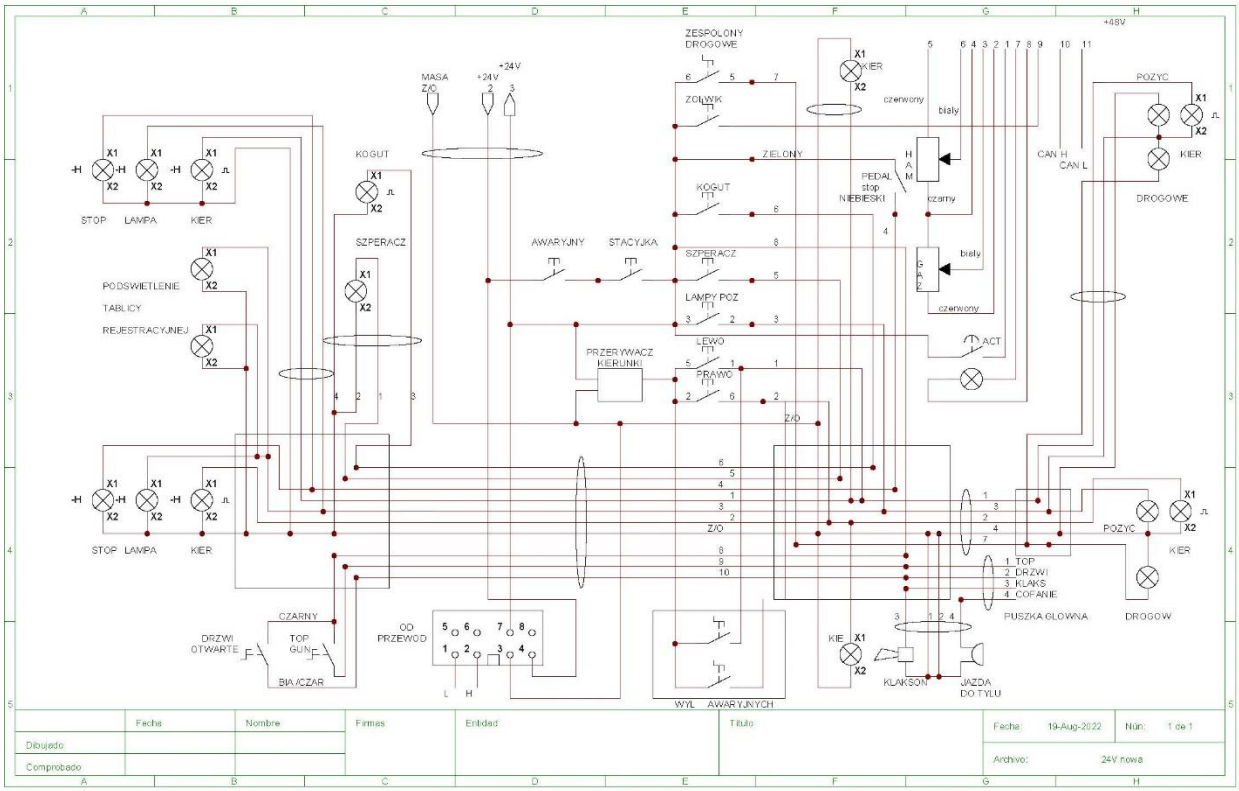

10.1.2 Hydraulic diagram

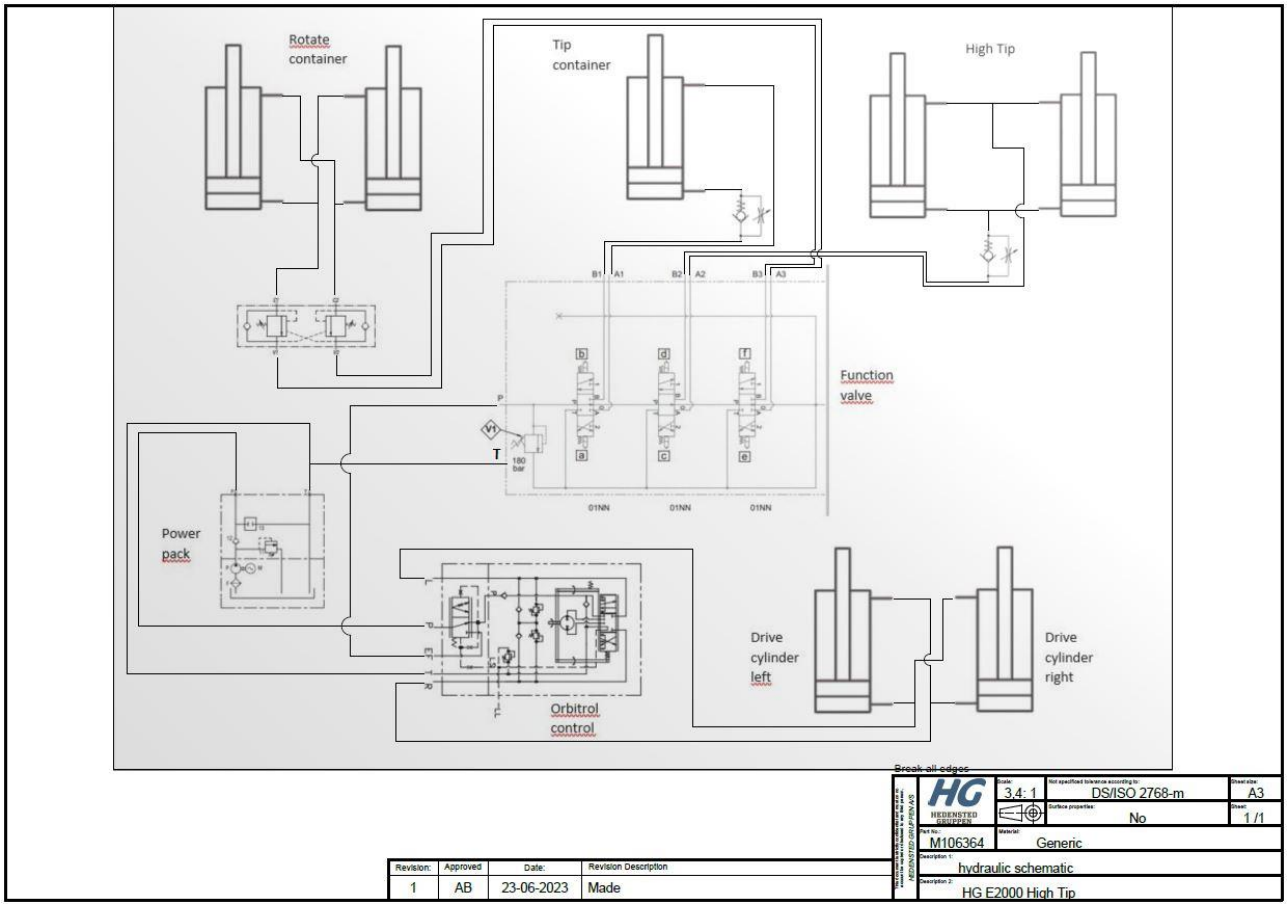

10.2 Blueprints

10.2.1 Overview prints

10.2.2 Parts prints

10.3 Additional manuals

10.4 Third-party documentation

10.5 Checklist for HG Machines HG E2000 and HG E2000 High Tip

The service workshop must keep the checklist during the warranty period. When the service workshop has reviewed and completed the checklist, a copy must be sent to HG Machines at hello@hg-machines.com.

Company:		Address:		Report no.:	
				Phone no.:	
Machine no.:	Product:	Model:	Serial number:	Year:	Time use:

	To be ticked at completion: A= ok B= repair C= not ok D= New parts installed				
		A	B	C	D
1. Special safety equipment					
1.1 Type sign					
1.2 Capacity sign					
1.3 Warning and information signs (Danish)					
1.4 Emergency stop					
1.5 Lockable switch					
1.6 Main switch					
1.7 Warning/rotor flasher					
1.8 Protections					
1.9 Safety harness					
2. Construction in general					
2.1 Rust, crack,s and breaks (welds)					
2.2 Break joints					
2.3 Break joint stability lock (joint axles)					
2.4 Bolted joints and locks					
2.5 Anchoring points for moving construction machinery					
2.6 Attachment points for pulling or lifting loads					
2.7 Swivel ring for container rotation					
2.8 Joint shaft and pendulum shaft lock					
3. Hydraulics					
3.1 Function control, especially Outer positions					
3.2 Pipes, hoses and fittings					
3.3 Control valves					
3.4 Hydraulic safety valves					

3.5 Tank				
3.6 Cylinders				
3.7 Engines				
3.8 Oil				
3.9 Leaks				
3.10 Pipe, hose breakage, load holding lowering brake valve				
3.11 Hydraulic pressure				
3.12 Foreclosure				
4. Brakes, wheels and lights				
4.1 Service brake				
4.2 Parking brake				
4.3 Rims, tyres, pressure				
4.4 lights, lights, and reflectors				
4.5 Horns				
4.6 Function control				
5. Steering gear				
5.1 Steering gear				
5.2 Wheels and wheel brackets				
5.3 Hydraulic auxiliary steering				
6. Electrical installation				
6.1 Battery and battery connections				
6.2 Electrical system, cables, connectors, and terminal blocks				
6.3 Wheel motor oil change				
6.4 CANBUS connection				
6.5 Wheel motor is tested if necessary. characterization				
6.6 EM brakes are tested				
6.7 Turn sensor is tested (CIT program)				
6.8 Electric box and fuse boxes				
6.9 Battery packs individually (computer)				
6.10 Charger (Fast)				
6.11 Charger (Slow)				
6.12 If new updates				
7. Driver's seat and cabin				
7.1 Access road, handles, and non-slip steps				

7.2 Controls and symbols				
7.3 Pedals				
7.4 Seat attachment and adjustment				
7.5 Seat vibration isolation and padding				
7.11 Mirrors				
7.14 Instrument, lamps and switches				
8. Other essential checkpoints				
8.1 CE marking				
8.2 EC declaration of conformity (Danish)				
8.3 User Manual (Danish)				
8.4 Maintenance instructions (Danish)				
8.5 Installation path for equipment cable (Danish)				

Comment B = Repair	
What has been conducted?	

Comment C = Not okay	
What is not okay?	

Comment D = New parts	
Which new parts have been installed??	

Is the machine approved?			
Approved:		Not approved	
Check conducted by:			
Company:			
Date:			